SAER ELETTROPOMPE	Technical data M 300 C	Revision no	Page: 1

	Receiver	From
Company name		
Respons. Department		
Person in charge		
Phone number		
Fax no		
E-mail address		

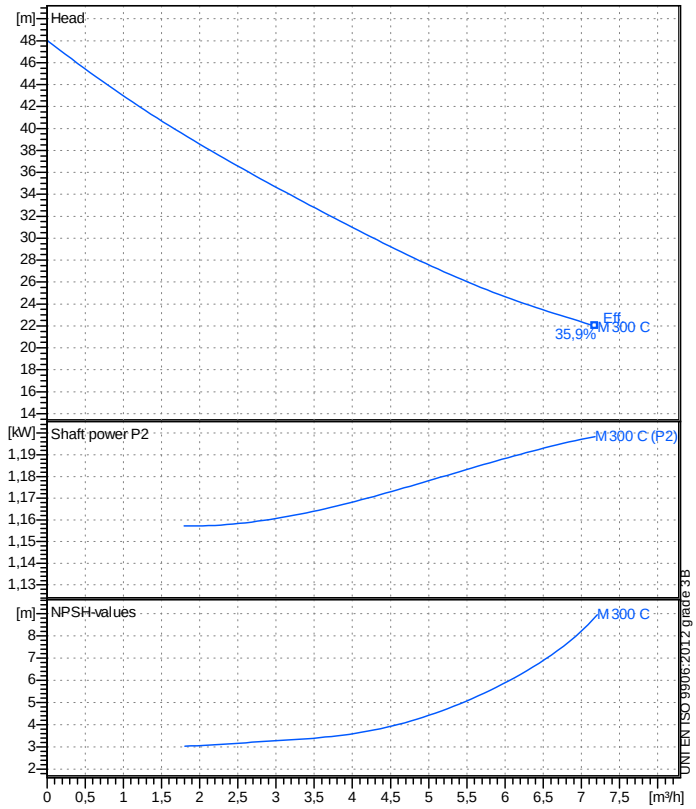

Operating data specification

Nominal flow	m³/h	0
Nominal head	m	0
Static head	m	0
NPSH - value of plant	m	0
Inlet pressure	bar	0,09793
Fluid		Water, pure
Operating temperature t A	°C	20
Density at t A	kg/m³	998,3
Kin. viscosity at t A	mm²/s	1,005

Pump

Pump name			M 300 C	
Size				
Design				
Speed rpm	2850		No of stages	1
Impeller type				
Flow	Nominal	m³/h		
	Max-	m³/h		7,21
	Min-	m³/h		0,000854
Head	Nominal	m		
	Max-	m		48
	Min-	m		21,9
Head H(Q=0)		m		48
NPSH 3%		m		
Max. working pressure		bar		4,7
Shaft power		kW		
Efficiency		%		
Max absorbed power		kW		1,1984

Materials Pump

Pump body	Cast iron G20
Plug	Brass
Gasket	Aluminium
Nut	Brass
Impeller	Brass
Rotating mechanical seal	Graphite
Fixed mechanical seal	Ceramic
OR	Rubber NBR
Seal retaining disc	Stainless steel AISI 304

Motor		Frame size		80	
Manufacturer / Type		SAER 80 2 - 1,1 1~			
Rated power	kW	1,1	Efficiency 4/4		0 %
Electric current	A	9 A	Speed	rpm	2950
Electric voltage	V	230 V	1~	Hz	50
Starting mode		Unknown			
Degree of protection		IP 44	Insulation class		F

Dimensions in mm

a	160,5
b	168,5
DNA	G 1 1/2"
DNM	G 1 1/4"
f	246,5
H	235
h1	120
h2	233
n1	180
n2	228
od	11
w	180

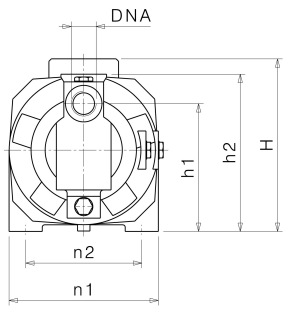

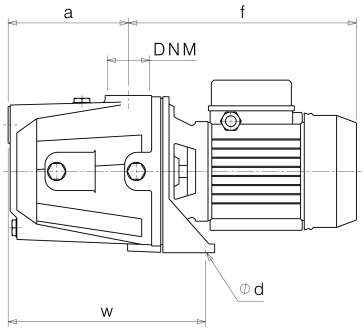

Remarks:

Project	Project ID	Created by	Created on **2019-02-13**	Last update