SAER ELETTROPOMPE	Technical data KF 2	Revision no	Page: 1

	Receiver	From
Company name		
Respons. Department		
Person in charge		
Phone number		
Fax no		
E-mail address		

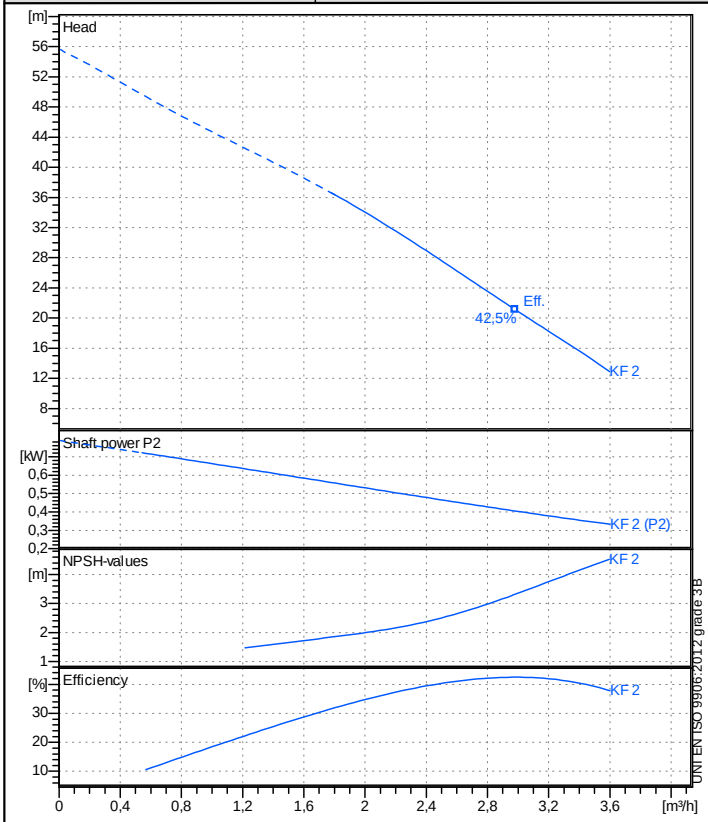

Operating data specification

Nominal flow	m³/h	0
Nominal head	m	0
Static head	m	0
NPSH - value of plant	m	0
Inlet pressure	bar	0,09793
Fluid		Water, pure
Operating temperature t A	°C	20
Density at t A	kg/m³	998,3
Kin. viscosity at t A	mm²/s	1,005

Pump

Pump name		KF 2		
Size				
Design				
Speed rpm	2850	No of stages	1	
Impeller type		Peripheral impeller		
Flow	Nominal		m³/h	
	Max-		m³/h	3,6
	Min-		m³/h	1,8
Head	Nominal		m	
	Max-		m	36,4
	Min-		m	12,9
Head H(Q=0)			m	55,6
NPSH 3%			m	
Max. working pressure			bar	5,45
Shaft power			kW	
Efficiency			%	
Max absorbed power			kW	0,71826

Materials Pump

Shaft	Stainless steel AISI 420 (1.4028)
Impeller	Brass
Pump body	Cast iron EN-GJL-200
Support	Cast iron EN-GJL-200
OR	NBR Rubber
Mechanical seal	BXPG (Gra/Cer/NBR)

Motor		Frame size		71	
Manufacturer / Type		SAER 71 2 - 0,55 1~			
Rated power	kW	0,55	Efficiency 4/4		0 %
Electric current	A	4,5 A	Speed	rpm	2950
Electric voltage	V	230 V	1~	Hz	50
Starting mode		Unknown			
Degree of protection		IP 44	Insulation class		F

Dimensions in mm

a	23
DNA	G 1"
DNM	G 1"
f	237
H	180
h1	124
h2	156
m1	112
m2	90
n1	135
n2	112
od	7
w	64

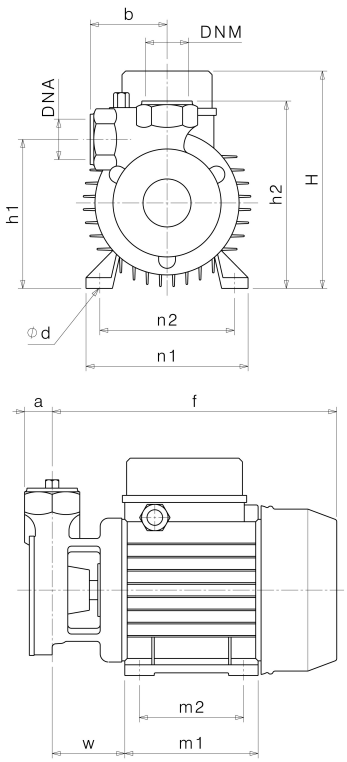

Remarks:

Project	Project ID	Created by	Created on **2019-02-13**	Last update